

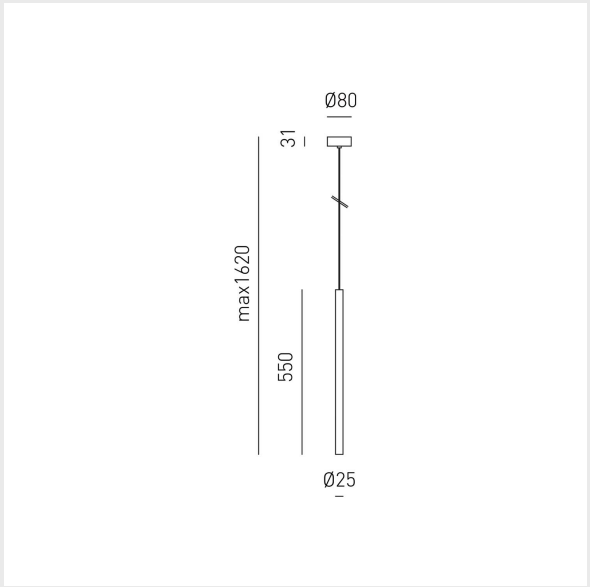

THALASSIA S/G

FTHSB2 - BIANCO - WHITE

TECHNICAL DATA
Installation: Interno _ Sospensione
Source: Led integrato
Power: 7W
Power Supply: 220-240V AC _ 50/60Hz
Dimming: Non dimmerabile _ On - Off
Lumen: 398lm
Color Temperature: 3000K
Light Beam: 18° _ Diretta
CRI: >90
Lifespan: 30.000h
IP Rating: IP20
Insulation Class: I
Gross Weight: 0.67 Kg
Net Weight: 0.46 Kg

Sospensione singola con montatura in alluminio. Finitura bianco satinato con rosone bianco satinato. Sorgente luminosa Led non dimmerabile ed alimentatore incluso.

Single pendant light fixture with an aluminium frame with a ceiling rose.Finish satin white with a satin white ceiling rose. Non-dimmable LED light source and power supply included.

Suspension simple avec monture en aluminium. Finition blanc satiné avec rosace blanche satinée. Source lumineuse Led non graduable et ballast inclus.

Einzelne Hängeleuchte mit Aluminiumrahmen. Satinweißes Finish mit satinweißer Rosette. Nicht dimmbare Led-Lichtquelle und Vorschaltgerät enthalten.

GEA LUCE



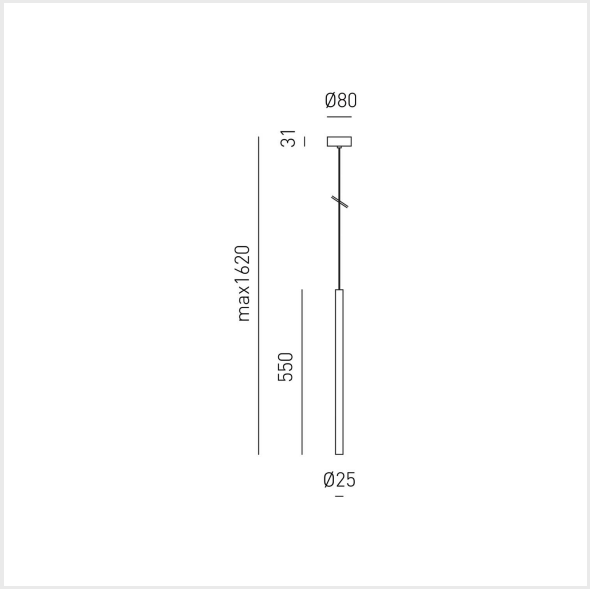

THALASSIA S/G

FTHSN2 - NERO - BLACK

TECHNICAL DATA
Installation: Interno _ Sospensione
Source: Led integrato
Power: 7W
Power Supply: 220-240V AC _ 50/60Hz
Dimming: Non dimmerabile _ On - Off
Lumen: 398lm
Color Temperature: 3000K
Light Beam: 18° _ Diretta
CRI: >90
Lifespan: 30.000h
IP Rating: IP20
Insulation Class: I
Gross Weight: 0.67 Kg
Net Weight: 0.46 Kg

Sospensione singola con montatura in alluminio.Finitura nero satinato con rosone nero satinato.Sorgente luminosa Led non dimmerabile ed alimentatore incluso.

Single pendant light fixture with an aluminium frame with a ceiling rose.Finish satin black with satin black ceiling rose. Non-dimmable LED light source and power supply included.

Suspension simple avec monture en aluminium. Finition noire satinée avec rosace noire satinée. Source lumineuse LED non graduable et ballast inclus.

Einzelne Hängeleuchte mit Aluminiumrahmen, satinierte schwarze Oberfläche mit satinierter schwarzer Rosette. Nicht dimmbare LED-Lichtquelle und Vorschaltgerät enthalten.



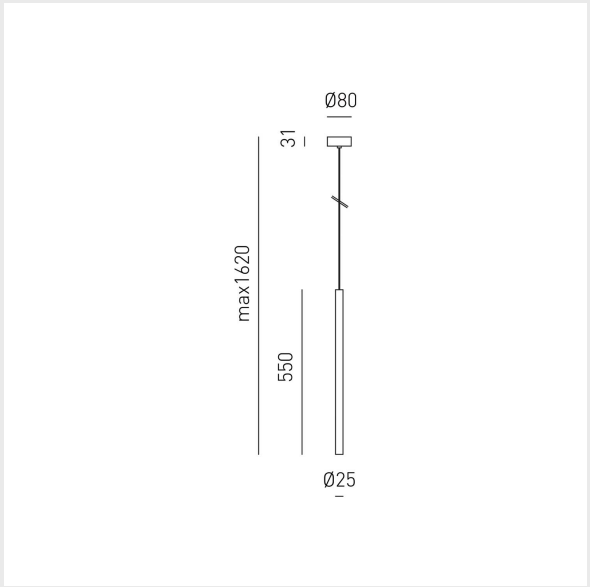

THALASSIA S/G

FTHSO2 - ORO - GOLD

TECHNICAL DATA
Installation: Interno _ Sospensione
Source: Led integrato
Power: 7W
Power Supply: 220-240V AC _ 50/60Hz
Dimming: Non dimmerabile _ On - Off
Lumen: 398lm
Color Temperature: 3000K
Light Beam: 18° _ Diretta
CRI: >90
Lifespan: 30.000h
IP Rating: IP20
Insulation Class: I
Gross Weight: 0.67 Kg
Net Weight: 0.46 Kg

Sospensione singola con montatura in alluminio.Finitura oro con rosone nero satinato.Sorgente luminosa Led non dimmerabile ed alimentatore incluso.

Single pendant light fixture with an aluminium frame with a ceiling rose.Finish gold with a satin black ceiling rose. Non-dimmable LED light source and power supply included.

Suspension simple avec monture en aluminium. Finition dorée avec rosace noire satinée. Source lumineuse Led non graduable et ballast inclus.

Einzelne Hängeleuchte mit Aluminiumrahmen. Goldfarbenes Finish mit satinierter schwarzer Rosette. Nicht dimmbare LED-Lichtquelle und Vorschaltgerät enthalten.