GEA LUCE

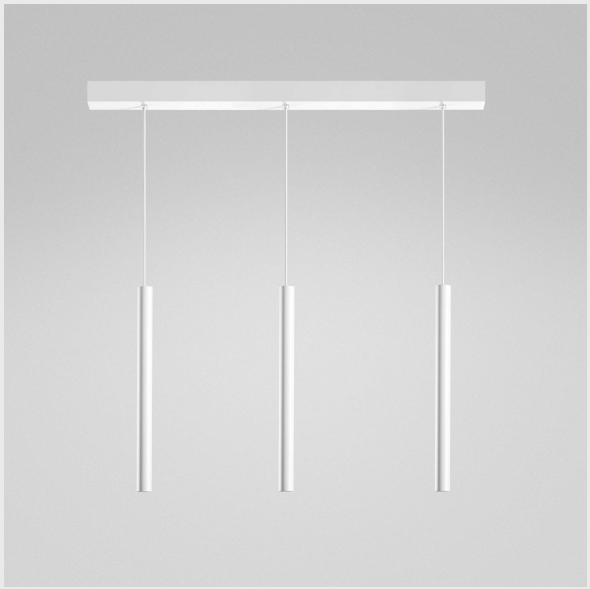

THALASSIA S/3P

FTHSB3 - BIANCO - WHITE

TECHNICAL DATA
Installation: Interno _ Sospensione
Source: Led integrato
Power: 3x7W
Power Supply: 220-240V AC _ 50/60Hz
Dimming: Non dimmerabile _ On - Off
Lumen: 1194lm
Color Temperature: 3000K
Light Beam: 18° _ Diretta
CRI: >90
Lifespan: 30.000h
IP Rating: IP20
Insulation Class: I
Gross Weight: 1.90 Kg
Net Weight: 1.65 Kg

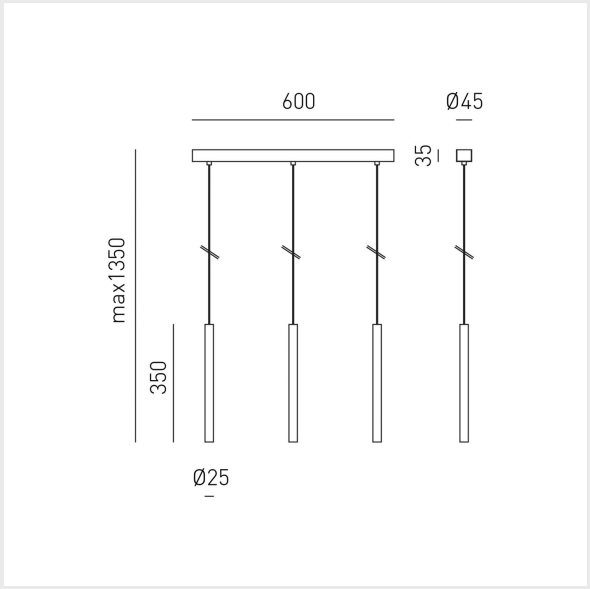

Sospensione multipla lineare a 3 luci con montatura in alluminio.Finitura bianco satinato con rosone bianco satinato.Sorgente luminosa Led non dimmerabile ed alimentatore incluso.

Linear multi-pendant light with 3 lights. Finish satin white with satin white ceiling rose. Non-dimmable LED light source and power supply included.

Suspension linéaire multiple à 3 lumières avec monture en aluminium. Finition blanc satiné avec rosace blanche satinée. Source lumineuse LED non-graduable et ballast inclus.

Lineare, mehrflammige 3-Licht-Hängeleuchte mit Aluminiumrahmen. Satinweißes Finish mit satinweißer Rosette. Nicht dimmbare Led-Lichtquelle und Vorschaltgerät enthalten.

GEA LUCE



THALASSIA S/3P

FTHSN3 - NERO - BLACK

TECHNICAL DATA
Installation: Interno _ Sospensione
Source: Led integrato
Power: 3x7W
Power Supply: 220-240V AC _ 50/60Hz
Dimming: Non dimmerabile _ On - Off
Lumen: 1194lm
Color Temperature: 3000K
Light Beam: 18° _ Diretta
CRI: >90
Lifespan: 30.000h
IP Rating: IP20
Insulation Class: I
Gross Weight: 1.90 Kg
Net Weight: 1.65 Kg

Sospensione multipla lineare a 3 luci con montatura in alluminio.Finitura nero satinato con rosone nero satinato.Sorgente luminosa Led non dimmerabile ed alimentatore incluso.

Linear multi-pendant light with 3 lights. Finish satin black with satin black ceiling rose. Non-dimmable LED light source and power supply included.

Suspension linéaire multiple à 3 lumières avec monture en aluminium. Finition noire satinée avec rosace noire satinée. Source lumineuse LED non graduable et ballast inclus.

Lineare 3-Licht-Pendelleuchte mit Aluminiumrahmen, satinierte schwarze Oberfläche mit satinierter schwarzer Rosette. Nicht dimmbare LED-Lichtquelle und Vorschaltgerät enthalten.

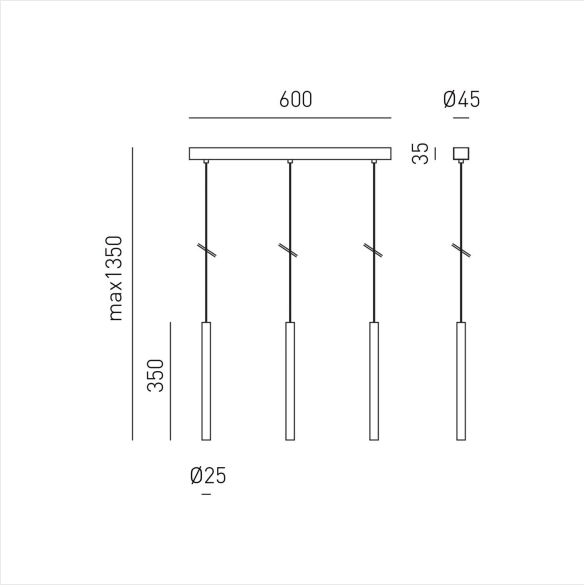

GEA LUCE



THALASSIA S/3P

FTHSO3 - ORO - GOLD

TECHNICAL DATA
Installation: Interno _ Sospensione
Source: Led integrato
Power: 3x7W
Power Supply: 220-240V AC _ 50/60Hz
Dimming: Non dimmerabile _ On - Off
Lumen: 1194lm
Color Temperature: 3000K
Light Beam: 18° _ Diretta
CRI: >90
Lifespan: 30.000h
IP Rating: IP20
Insulation Class: I
Gross Weight: 1.90 Kg
Net Weight: 1.65 Kg

Sospensione multipla lineare a 3 luci con montatura in alluminio.Finitura oro con rosone nero satinato.Sorgente luminosa Led non dimmerabile ed alimentatore incluso.

Linear multi-pendant light with 3 lights.Finish gold with a satin black ceiling rose. Non-dimmable LED light source and power supply included.

Suspension multiple linéaire à 3 lumières avec monture en aluminium. Finition dorée avec rosace noire satinée. Source lumineuse LED non graduable et ballast inclus.

Lineare 3-Licht-Mehrfachaufhängung mit Aluminiumrahmen. Goldfarbenes Finish mit satinierter schwarzer Rosette. Nicht dimmbare LED-Lichtquelle und Vorschaltgerät enthalten.

