GEA LUCE



JULIETTE S

FJUSB1 - BIANCO - WHITE

TECHNICAL DATA
Installation: Interno _ Sospensione
Source: Led integrato
Power: 50W
Power Supply: 220-240V AC _ 50/60Hz
Dimming: Dimmerabile _ Taglio fase+Push non incl.
Lumen: 2300lm
Color Temperature: 3000K
Light Beam: 120° _ Diretta
CRI: >80
Lifespan: 30.000h
IP Rating: IP20
Insulation Class: I
Gross Weight: 4.20 Kg
Net Weight: 2.90 Kg

Montatura in alluminio satinato bianco. Diffusore in silicone bianco opale. Sorgente luminosa led dimmerabile a taglio di fase tramite dimmer esterno+push (non inclusi).

White satin finish aluminium frame. White opal silicone di f fuser. Dimmable LED light source phase cut via an external dimmer+push (not included).

Monture en aluminium blanc satiné. Diffuseur en silicone blanc opale. Source lumineuse LED à gradation progressive via un gradateur externe+poussoir (pas inclus).

Weißer satinierter Aluminiumrahmen. Weißer opaler Silikondiffusor. Dimmbare LED-Lichtquelle mit Phasenanschnitt über externen Dimmer+Push (nicht enthalten).

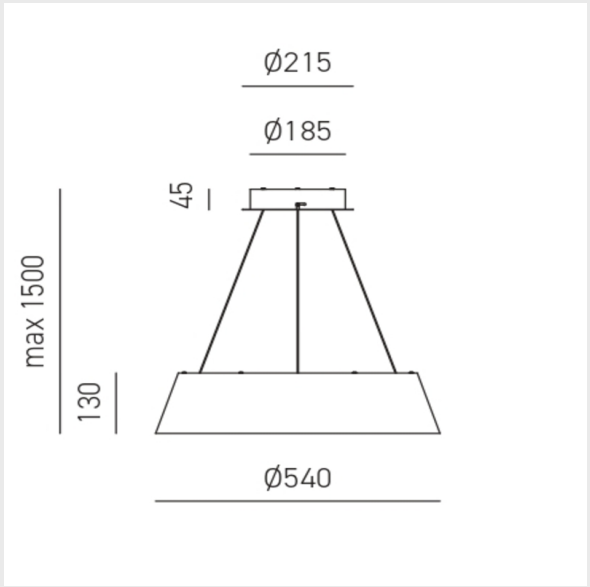

GEA LUCE



JULIETTE S

FJUSN1 - NEROORO

TECHNICAL DATA
Installation: Interno _ Sospensione
Source: Led integrato
Power: 50W
Power Supply: 220-240V AC _ 50/60Hz
Dimming: Dimmerabile _ Taglio fase+Push non incl.
Lumen: 2200lm
Color Temperature: 3000K
Light Beam: 120° _ Diretta
CRI: >80
Lifespan: 30.000h
IP Rating: IP20
Insulation Class: I
Gross Weight: 4.20 Kg
Net Weight: 2.90 Kg

Montatura in alluminio satinato nero con interno oro spazzolato. Diffusore in silicone bianco opale. Sorgente luminosa led dimmerabile a taglio di fase tramite dimmer esterno+push (non inclusi).

Black satin finish aluminium frame with internal brushed gold sur face. White opal silicone di f fuser. Dimmable LED light source phase cut via an external dimmer+push (not included).

Monture en aluminium noir satiné avec intérieur en or brossé. Diffuseur en silicone blanc opale. Source lumineuse LED à gradation progressive via un gradateur externe+poussoir (pas inclus).

Schwarzer satinierter Aluminiumrahmen mit gebürsteter goldener Innenseite. Opalweißer Silikondiffusor. Dimmbare LED-Lichtquelle mit Phasenanschnitt über externen Dimmer+Push (nicht enthalten).

