GEA LUCE

FLOR P/S

FFLPB4 - BIANCO - WHITE

TECHNICAL DATA
Installation: Interno _ Soffitto
Source: Led integrato
Power: 80W
Power Supply: 220-240V AC _ 50/60Hz
Dimming: Dimmerabile _ Taglio fase+Push non incl.
Lumen: 6300lm
Color Temperature: 3000K
Light Beam: 120° _ Diretta
CRI: >80
Lifespan: 30.000h
IP Rating: IP20
Insulation Class: I
Gross Weight: 9.80 Kg
Net Weight: 5.50 Kg

Montatura in alluminio satinato bianco. Diffusore in metacrilato bianco opale. Sorgente luminosa led dimmerabile a taglio di fase tramite dimmer esterno+push (non inclusi).

White satin finish aluminium frame. White opal methacrylate di f fuser. Phase cut dimmable LED light source via external dimmer+push (not included).

Monture en aluminium satiné blanc. Diffuseur en méthacrylate blanc opale. Source lumineuse LED à gradation de phase via un variateur externe+poussoir (non inclus).

Weißer satinierter Aluminiumrahmen. Opalweißer Methacrylat-Diffusor. Phasenanschnitt dimmbare LED-Lichtquelle über externen Dimmer+Push (nicht enthalten).

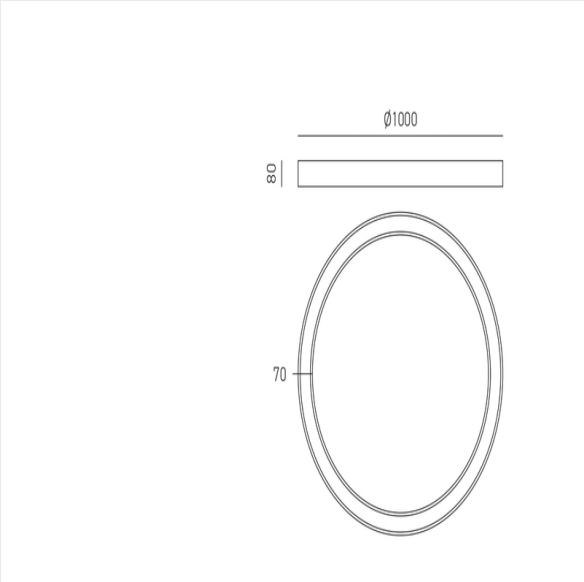

GEA LUCE



FLOR P/S

FFLPN4 - NERO - BLACK

TECHNICAL DATA
Installation: Interno _ Soffitto
Source: Led integrato
Power: 80W
Power Supply: 220-240V AC _ 50/60Hz
Dimming: Dimmerabile _ Taglio fase+Push non incl.
Lumen: 6100lm
Color Temperature: 3000K
Light Beam: 120° _ Diretta
CRI: >80
Lifespan: 30.000h
IP Rating: IP20
Insulation Class: I
Gross Weight: 9.80 Kg
Net Weight: 5.50 Kg

Montatura in alluminio satinato nero. Diffusore in metacrilato bianco opale. Sorgente luminosa led dimmerabile a taglio di fase tramite dimmer esterno+push (non inclusi).

Black satin finish aluminium frame. White opal methacrylate di f fuser. Phase cut dimmable LED light source via external dimmer+push (not included).

Monture en aluminium noir satiné. Diffuseur en méthacrylate blanc opale. Source lumineuse LED à gradation de phase via un variateur externe+poussoir (non inclus).

Schwarzer satinierter Aluminiumrahmen. Opalweißer Methacrylat-Diffusor. Phasenanschnitt dimmbare LED-Lichtquelle über externen Dimmer+Push (nicht enthalten).

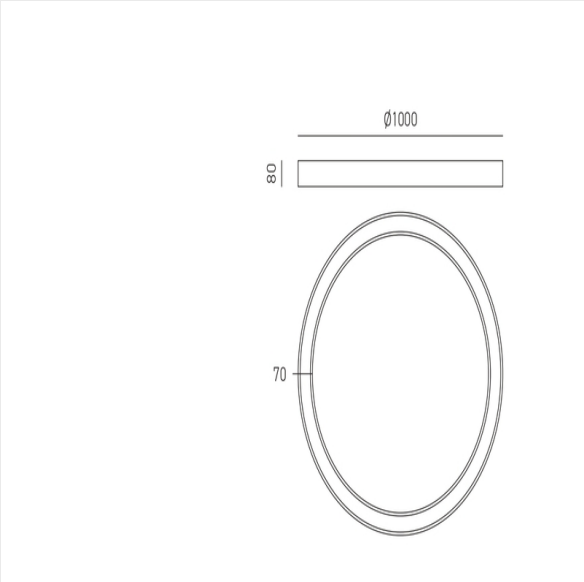

GEA LUCE



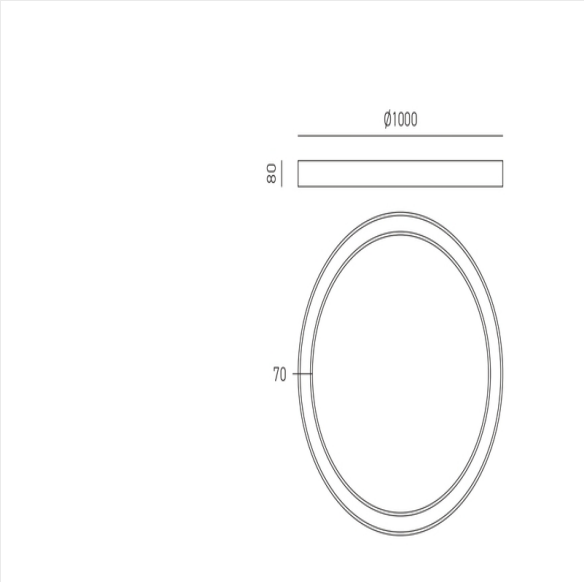

FLOR P/S

FFLPO4 - ORO-SPAZZOLATO - BRUSHED GOLD

TECHNICAL DATA
Installation: Interno _ Soffitto
Source: Led integrato
Power: 80W
Power Supply: 220-240V AC _ 50/60Hz
Dimming: Dimmerabile _ Taglio fase+Push non incl.
Lumen: 6200lm
Color Temperature: 3000K
Light Beam: 120° _ Diretta
CRI: >80
Lifespan: 30.000h
IP Rating: IP20
Insulation Class: I
Gross Weight: 9.80 Kg
Net Weight: 5.50 Kg

Montatura in alluminio oro spazzolato. Diffusore in metacrilato bianco opale. Sorgente luminosa led dimmerabile a taglio di fase tramite dimmer esterno+push (non inclusi).

Brushed gold finish aluminium frame. White opal methacrylate di f fuser. Phase cut dimmable LED light source via external dimmer+push (not included).

Monture en aluminium doré brossé. Diffuseur en méthacrylate blanc opale. Source lumineuse LED à gradation de phase via un variateur externe+poussoir (non inclus).

Gebürsteter goldener Aluminiumrahmen. Opalweißer Methacrylat-Diffusor. Phasenanschnitt dimmbare LED-Lichtquelle über externen Dimmer+Push (nicht enthalten).