GEA LUCE



ECARIS A/G

FECAA2 - ARANCIO-BRUCIATO

TECHNICAL DATA
Installation: Interno _ Parete
Source: Led integrato
Power: 30W+5W
Power Supply: 220-240V AC _ 50/60Hz
Dimming: Dimmerabile _ Push incluso
Lumen: 1000lm-1100lm
Color Temperature: 3000K-4000K
Light Beam: 120° _ Biemissione
CRI: >80
Lifespan: 30.000h
IP Rating: IP20
Insulation Class: I
Energy Class: E
Volume: 0,0673m3
Gross Weight: 11.50 Kg
Net Weight: 7.90 Kg

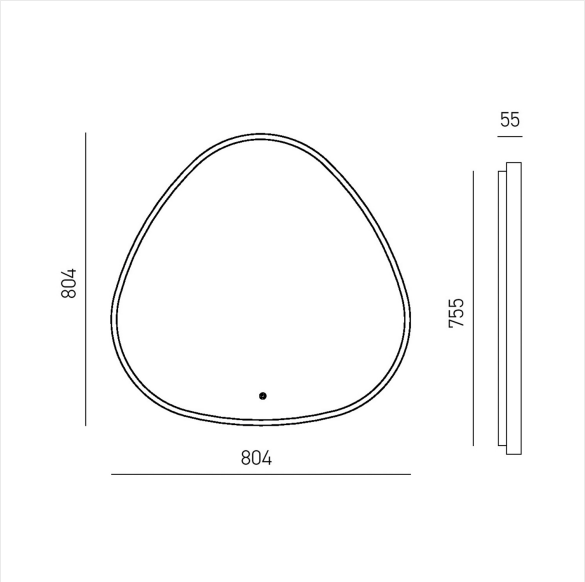

GEA LUCE



ECARIS A/G

FECAB2 - BIANCO - WHITE

TECHNICAL DATA
Installation: Interno _ Parete
Source: Led integrato
Power: 30W+5W
Power Supply: 220-240V AC _ 50/60Hz
Dimming: Dimmerabile _ Push incluso
Lumen: 1100lm-1200lm
Color Temperature: 3000K-4000K
Light Beam: 120° _ Biemissione
CRI: >80
Lifespan: 30.000h
IP Rating: IP20
Insulation Class: I
Energy Class: E
Volume: 0,0673m3
Gross Weight: 11.50 Kg
Net Weight: 7.90 Kg

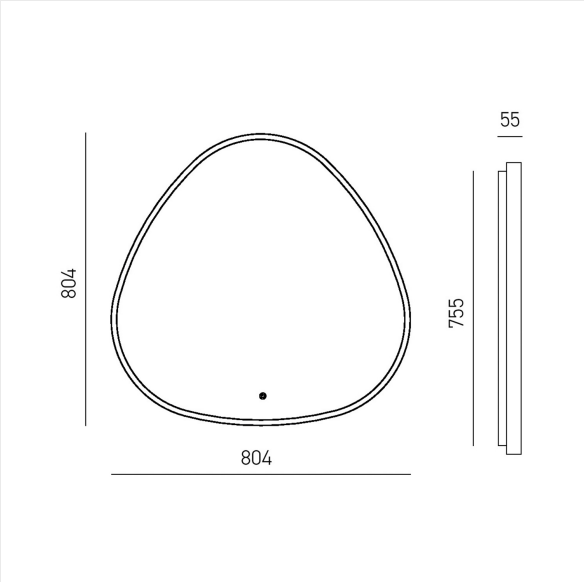

GEA LUCE



ECARIS A/G

FECAN2 - NERO - BLACK

TECHNICAL DATA
Installation: Interno _ Parete
Source: Led integrato
Power: 30W+5W
Power Supply: 220-240V AC _ 50/60Hz
Dimming: Dimmerabile _ Push incluso
Lumen: 1000lm-1100lm
Color Temperature: 3000K-4000K
Light Beam: 120° _ Biemissione
CRI: >80
Lifespan: 30.000h
IP Rating: IP20
Insulation Class: I
Energy Class: E
Volume: 0,0673m3
Gross Weight: 11.50 Kg
Net Weight: 7.90 Kg

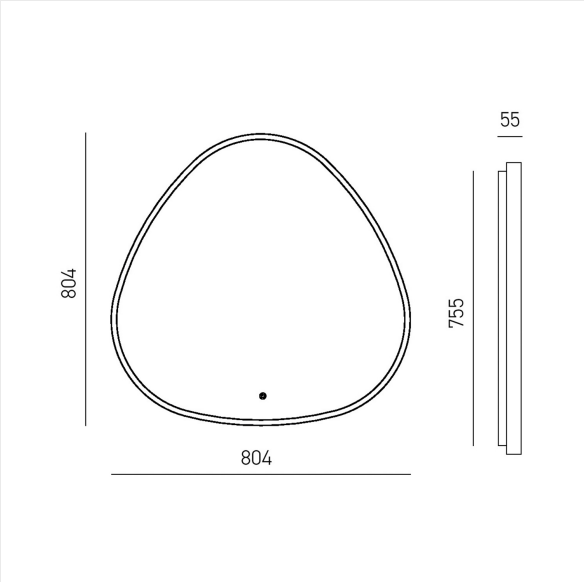

GEA LUCE



ECARIS A/G

FECABE2 - NEW-BEIGE

TECHNICAL DATA
Installation: Interno _ Parete
Source: Led integrato
Power: 30W+5W
Power Supply: 220-240V AC _ 50/60Hz
Dimming: Dimmerabile _ Push incluso
Lumen: 1000lm-1100lm
Color Temperature: 3000K-4000K
Light Beam: 120° _ Biemissione
CRI: >80
Lifespan: 30.000h
IP Rating: IP20
Insulation Class: I
Energy Class: E
Volume: 0,0673m3
Gross Weight: 11.50 Kg
Net Weight: 7.90 Kg

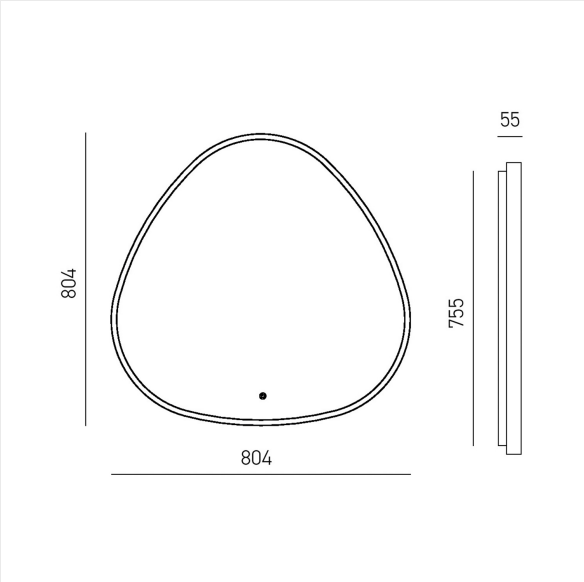

GEA LUCE



ECARIS A/G

FECAO2 - ORO - GOLD

TECHNICAL DATA
Installation: Interno _ Parete
Source: Led integrato
Power: 30W+5W
Power Supply: 220-240V AC _ 50/60Hz
Dimming: Dimmerabile _ Push incluso
Lumen: 1000lm-1100lm
Color Temperature: 3000K-4000K
Light Beam: 120° _ Biemissione
CRI: >80
Lifespan: 30.000h
IP Rating: IP20
Insulation Class: I
Energy Class: E
Volume: 0,0673m3
Gross Weight: 11.50 Kg
Net Weight: 7.90 Kg

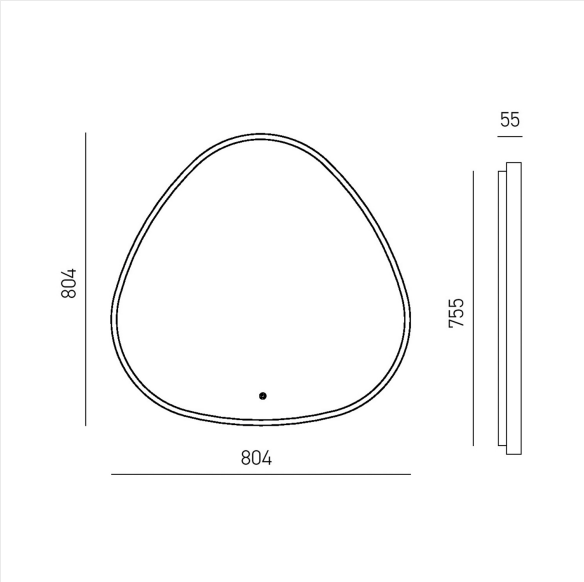

GEA LUCE



ECARIS A/G

FECAP2 - PESCA

TECHNICAL DATA
Installation: Interno _ Parete
Source: Led integrato
Power: 30W+5W
Power Supply: 220-240V AC _ 50/60Hz
Dimming: Dimmerabile _ Push incluso
Lumen: 1000lm-1100lm
Color Temperature: 3000K-4000K
Light Beam: 120° _ Biemissione
CRI: >80
Lifespan: 30.000h
IP Rating: IP20
Insulation Class: I
Energy Class: E
Volume: 0,0673m3
Gross Weight: 11.50 Kg
Net Weight: 7.90 Kg

