GEA LUCE

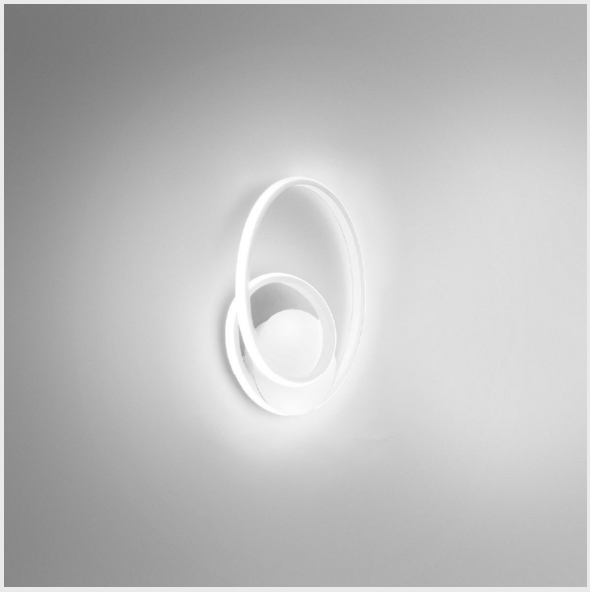

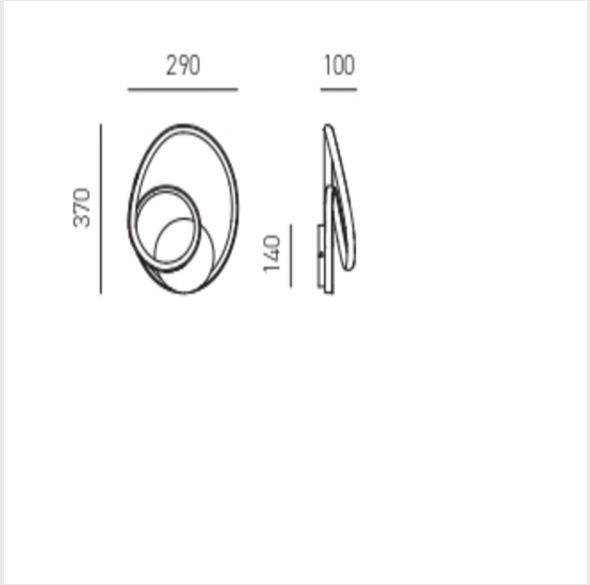

DIVA A

FDIAB1 - BIANCO - WHITE

TECHNICAL DATA
Installation: Interno _ Parete
Source: Led integrato
Power: 21W
Power Supply: 220-240V AC _ 50/60Hz
Dimming: Dimmerabile _ Taglio fase+Push non incl.
Lumen: 1320lm
Color Temperature: 3000K
Light Beam: 120° _ Diffusa
CRI: >80
Lifespan: 30.000h
IP Rating: IP20
Insulation Class: I
Gross Weight: 1.50 Kg
Net Weight: 0.86 Kg

Montatura in alluminio bianco satinato. Diffusore in silicone bianco opale. Sorgente luminosa led dimmerabile a taglio di fase tramite dimmer esterno + push (non inclusi).

White aluminium frame. White opal silicone diffuser. Phase cut dimmable LED light source via external dimmer+push (not included).

Monture en aluminium blanc satiné. Diffuseur en silicone blanc opale. Source lumineuse LED à gradation progressive via un gradateur externe + bouton-poussoir (pas inclus).

Gestell aus satiniertem weißem Aluminium. Opalweißer Silikondiffusor. Dimmbare LED-Lichtquelle mit Phase-Cut über externen Dimmer + Push (nicht enthalten).

GEA LUCE

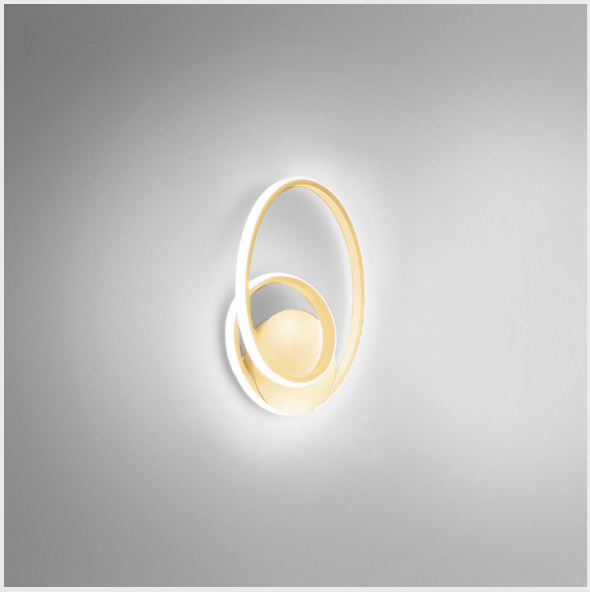

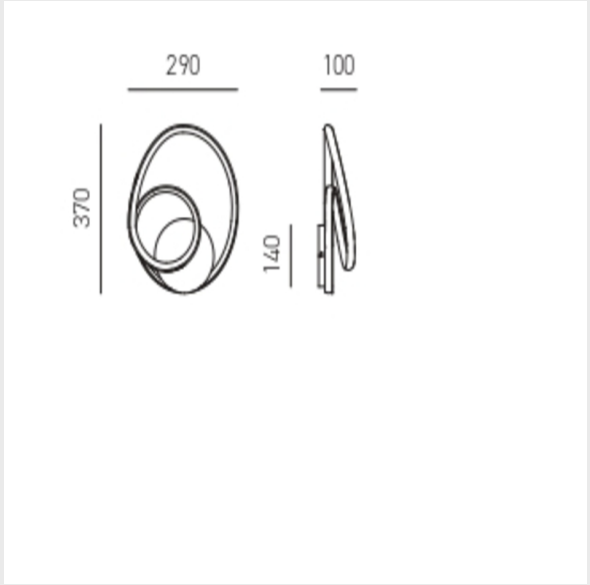

DIVA A

FDIAO1 - ORO-SPAZZOLATO - BRUSHED GOLD

TECHNICAL DATA
Installation: Interno _ Parete
Source: Led integrato
Power: 21W
Power Supply: 220-240V AC _ 50/60Hz
Dimming: Dimmerabile _ Taglio fase+Push non incl.
Lumen: 1200lm
Color Temperature: 3000K
Light Beam: 120° _ Diffusa
CRI: >80
Lifespan: 30.000h
IP Rating: IP20
Insulation Class: I
Gross Weight: 1.50 Kg
Net Weight: 0.86 Kg

Montatura in alluminio finitura oro spazzolato. Diffusore in silicone bianco opale. Sorgente luminosa led dimmerabile a taglio di fase tramite dimmer esterno + push (non inclusi).

Brushed gold aluminium frame. White opal silicone diffuser. Phase cut dimmable LED light source via external dimmer+push (not included).

Monture en aluminium finition or brossé. Diffuseur en silicone blanc opale. Source lumineuse LED à gradation progressive via un gradateur externe + poussoir (pas inclus).

Gebürsteter goldfarbener Aluminiumrahmen. Opalweißer Silikondiffusor. Dimmbare LED-Lichtquelle mit Phase-Cut über externen Dimmer + Push (nicht enthalten).

GEA LUCE



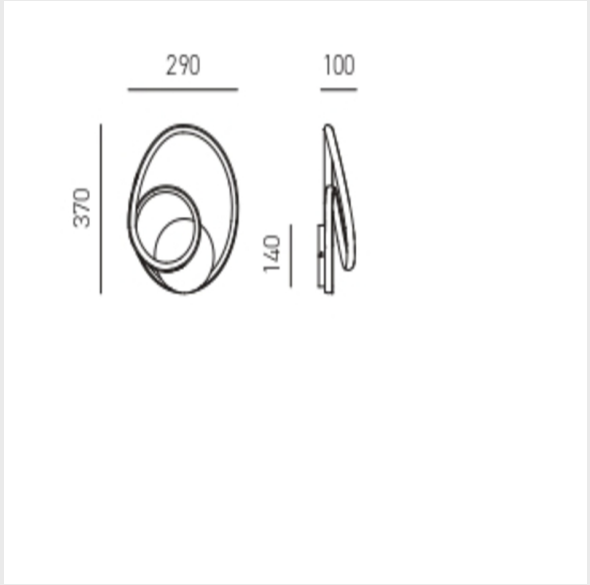

DIVA A

FDIAT1 - TITANIO - TITANIUM

TECHNICAL DATA
Installation: Interno _ Parete
Source: Led integrato
Power: 21W
Power Supply: 220-240V AC _ 50/60Hz
Dimming: Dimmerabile _ Taglio fase+Push non incl.
Lumen: 1150lm
Color Temperature: 3000K
Light Beam: 120° _ Diffusa
CRI: >80
Lifespan: 30.000h
IP Rating: IP20
Insulation Class: I
Gross Weight: 1.50 Kg
Net Weight: 0.86 Kg

Montatura in alluminio finitura titanio. Diffusore in silicone bianco opale. Sorgente luminosa led dimmerabile a taglio di fase tramite dimmer esterno + push (non inclusi).

Titanium aluminium frame. White opal silicone diffuser. Phase cut dimmable LED light source via external dimmer+push (not included).

Monture en aluminium finition titane. Diffuseur en silicone blanc opale. Source lumineuse LED à gradation progressive via un gradateur externe + poussoir (pas inclus).

Aluminiumrahmen mit Titanium-Finish. Opalweißer Silikondiffusor. Dimmbare LED-Lichtquelle mit Phase-Cut über externen Dimmer + Push (nicht enthalten).