

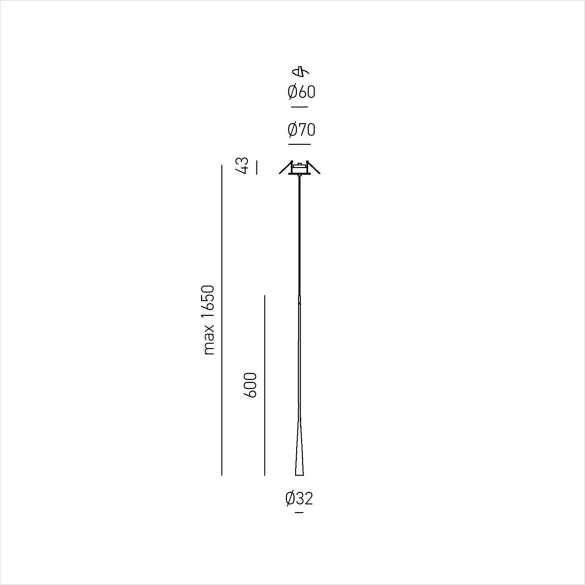

DAFNE SG/I

FDA1GAI - ARGENTO-OPACO

TECHNICAL DATA
Installation: Interno _ Incasso
Source: Led integrato
Power: 7W
Power Supply: 220-240V AC _ 50/60Hz
Dimming: Non dimmerabile _ On - Off
Lumen: 213lm
Color Temperature: 3000K
Light Beam: 38° _ Diretta
CRI: >90
Lifespan: 30.000h
IP Rating: IP20
Insulation Class: I
Energy Class: G
Volume: 0,0118m3
Gross Weight: 0.65 Kg
Net Weight: 0.42 Kg

Sospensione ad incasso singola con montatura in alluminio. Finitura argento opaco con rosone nero satinato. Sorgente luminosa LED ed alimentatore inclusi.

Single recessed suspension with aluminum frame. Matte silver finish with satin black rose. LED light source and driver included.

Suspension encastrée simple avec monture en aluminium. Finition argent mat avec rosace noir satiné. Source lumineuse LED et ballast inclus.

Einzelne Einbau-Pendelleuchte mit Aluminiumrahmen. Matt silbernes Finish mit satinschwarzer Rosette. Komplett mit LED-Lichtquelle und Vorschaltgerät.

GEA LUCE

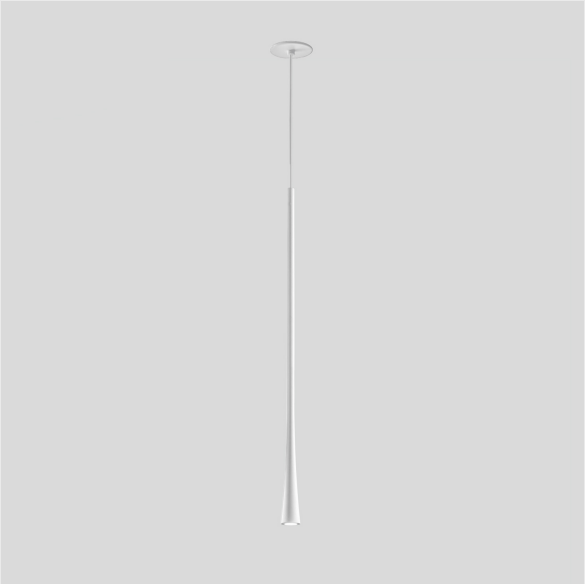

DAFNE SG/I

FDA1GBI - BIANCO - WHITE

TECHNICAL DATA
Installation: Interno _ Incasso
Source: Led integrato
Power: 7W
Power Supply: 220-240V AC _ 50/60Hz
Dimming: Non dimmerabile _ On - Off
Lumen: 213lm
Color Temperature: 3000K
Light Beam: 38° _ Diretta
CRI: >90
Lifespan: 30.000h
IP Rating: IP20
Insulation Class: I
Energy Class: G
Volume: 0,0118m3
Gross Weight: 0.65 Kg
Net Weight: 0.42 Kg

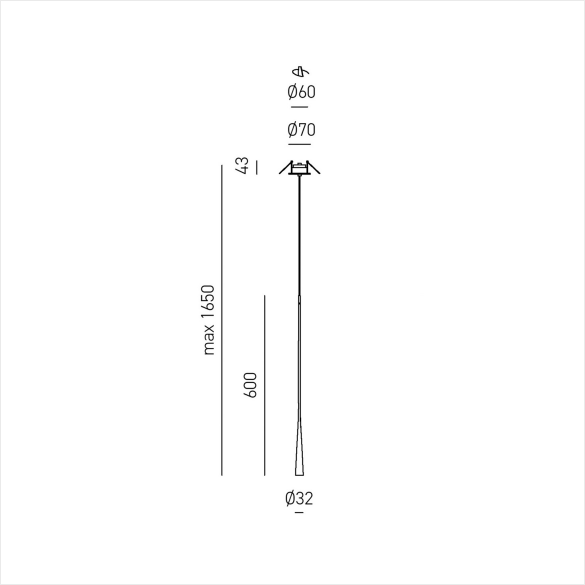

Sospensione ad incasso singola con montatura in alluminio. Finitura bianco satinato con rosone bianco satinato. Sorgente luminosa LED ed alimentatore inclusi.

Single recessed suspension with aluminum frame.Satin white finish with satin white rose. LED light source and driver included.

Suspension encastrée simple avec monture en aluminium. Finition blanc satiné avec rosace blanc satiné. Source lumineuse LED et ballast inclus.

Einzelne Einbau-Pendelleuchte mit Aluminiumrahmen. Oberfläche in Satinweiß mit Rosette in Satinweiß. Komplett mit LED-Lichtquelle und Vorschaltgerät.

GEA LUCE



DAFNE SG/I

FDA1GNI - NERO - BLACK

TECHNICAL DATA
Installation: Interno _ Incasso
Source: Led integrato
Power: 7W
Power Supply: 220-240V AC _ 50/60Hz
Dimming: Non dimmerabile _ On - Off
Lumen: 213lm
Color Temperature: 3000K
Light Beam: 38° _ Diretta
CRI: >90
Lifespan: 30.000h
IP Rating: IP20
Insulation Class: I
Energy Class: G
Volume: 0,0118m3
Gross Weight: 0.65 Kg
Net Weight: 0.42 Kg

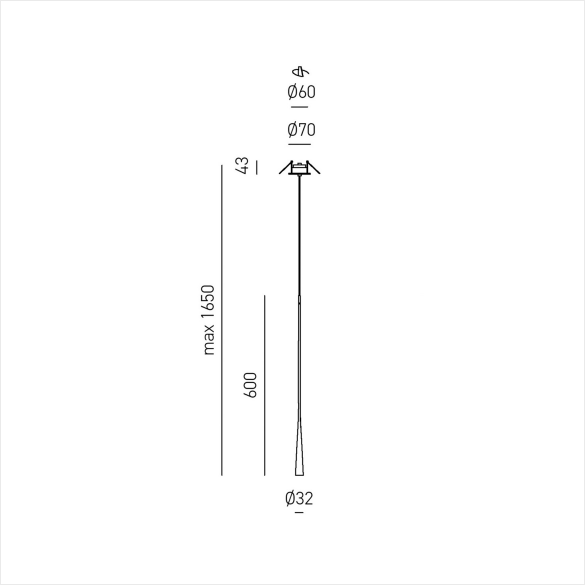

Sospensione ad incasso singola con montatura in alluminio. Finitura nero satinato con rosone nero satinato. Sorgente luminosa LED ed alimentatore inclusi.

Single recessed suspension with aluminum frame. Satin black finish with satin black rose. LED light source and driver included.

Suspension encastrée simple avec monture en aluminium. Finition noir satiné avec rosace noir satiné. Source lumineuse LED et ballast inclus.

Einzelne Einbau-Pendelleuchte mit Aluminiumrahmen. Oberfläche schwarz satiniert mit Rosette schwarz satiniert. Komplett mit LED-Lichtquelle und Vorschaltgerät.

GEA LUCE



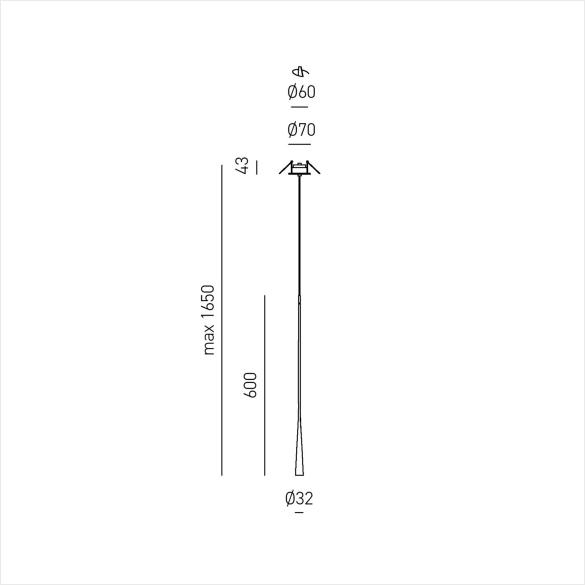

DAFNE SG/I

FDA1GOI - ORO - GOLD

TECHNICAL DATA
Installation: Interno _ Incasso
Source: Led integrato
Power: 7W
Power Supply: 220-240V AC _ 50/60Hz
Dimming: Non dimmerabile _ On - Off
Lumen: 213lm
Color Temperature: 3000K
Light Beam: 38° _ Diretta
CRI: >90
Lifespan: 30.000h
IP Rating: IP20
Insulation Class: I
Energy Class: G
Volume: 0,0118m3
Gross Weight: 0.65 Kg
Net Weight: 0.42 Kg

Sospensione ad incasso singola con montatura in alluminio. Finitura oro satinato con rosone nero satinato. Sorgente luminosa LED ed alimentatore inclusi.

Single recessed suspension with aluminum frame. Gold finish with satin black rose. LED light source and driver included.

Suspension encastrée simple avec monture en aluminium. Finition dorée avec rosace noire satinée. Source lumineuse LED et ballast inclus.

Einzelne Einbau-Pendelleuchte mit Aluminiumrahmen. Goldfarbenes Finish mit satinschwarzer Rosette. Komplett mit LED-Lichtquelle und Vorschaltgerät.

GEA LUCE



DAFNE SG/I

FDA1GRI - RAME - COPPER

TECHNICAL DATA
Installation: Interno _ Incasso
Source: Led integrato
Power: 7W
Power Supply: 220-240V AC _ 50/60Hz
Dimming: Non dimmerabile _ On - Off
Lumen: 213lm
Color Temperature: 3000K
Light Beam: 38° _ Diretta
CRI: >90
Lifespan: 30.000h
IP Rating: IP20
Insulation Class: I
Energy Class: G
Volume: 0,0118m3
Gross Weight: 0.65 Kg
Net Weight: 0.42 Kg

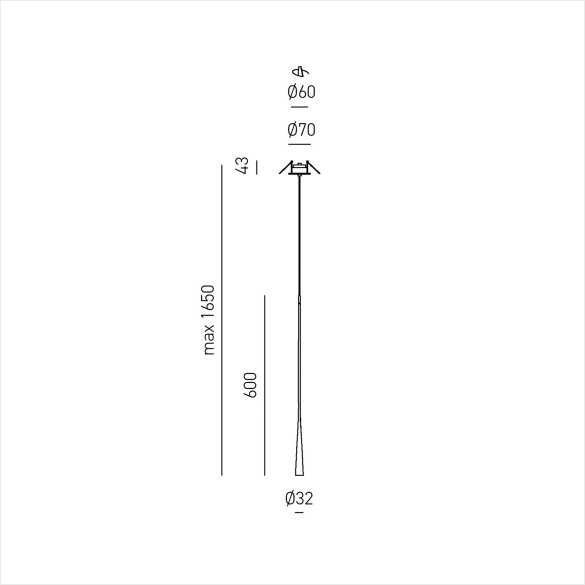

Sospensione ad incasso singola con montatura in alluminio. Finitura rame con rosone nero satinato. Sorgente luminosa LED ed alimentatore inclusi.

Single recessed suspension with aluminum frame. Copper finish with satin black rose. LED light source and driver included.

Suspension encastrée simple avec monture en aluminium. Finition cuivre avec rosace noire satinée. Source lumineuse LED et ballast inclus.

Einzelne Einbau-Pendelleuchte mit Aluminiumrahmen.Kupferfarbenes Finish mit satinschwarzer Rosette. Komplett mit LED-Lichtquelle und Vorschaltgerät.