GEA LUCE



CRISEIDE S/3

FCRSB11 - BIANCO - WHITE

TECHNICAL DATA
Installation: Interno _ Sospensione
Source: Led integrato
Power: 125W(35W+40W+50W)
Power Supply: 220-240V AC _ 50/60Hz
Dimming: Dimmerabile _ Taglio fase+Push non incl.
Lumen: 6900lm
Color Temperature: 3000K
Light Beam: 360°_ Diffusa
CRI: >80
Lifespan: 30.000h
IP Rating: IP20
Insulation Class: I
Gross Weight: 12.90 Kg
Net Weight: 8.35 Kg

Montatura in alluminio satinato bianco. Diffusore in silicone bianco opale. Sorgente luminosa in biemissione led dimmerabile a taglio di fase tramite dimmer esterno+push (non inclusi).

Matt white aluminium mount. White opal silicone diffuser. Dimmable bi-emission LED light source with phase cut via an external dimmer+push (not included).

Monture en aluminium satiné blanc. Diffuseur en silicone opale blanc. Source lumineuse en LED bi-émission dimmable en coupure de phase via un dimmer+push externe (pas inclus).

Weißer satinierter Aluminiumrahmen. Weißer opaler Silikondiffusor. LED-Lichtquelle mit Bi-Emission, dimmbar in Phase-Cut mit einem externen Dimmer+Push (nicht enthalten).

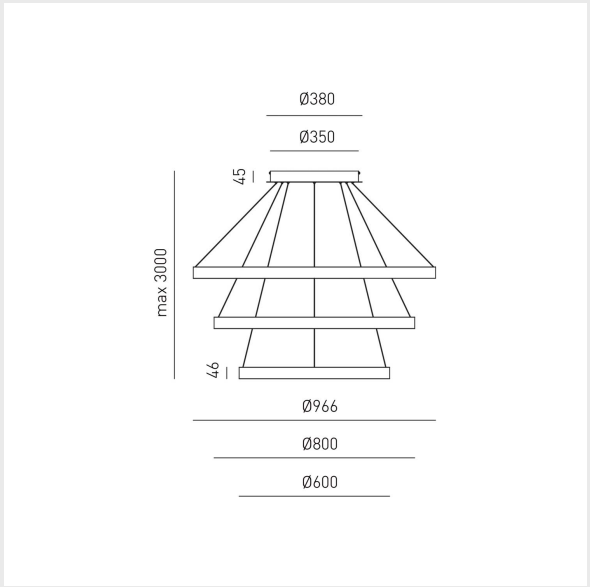

GEA LUCE



CRISEIDE S/3

FCRSN11 - NERO - BLACK

TECHNICAL DATA
Installation: Interno _ Sospensione
Source: Led integrato
Power: 125W(35W+40W+50W)
Power Supply: 220-240V AC _ 50/60Hz
Dimming: Dimmerabile _ Taglio fase+Push non incl.
Lumen: 3100lm
Color Temperature: 3000K
Light Beam: 360°_ Diffusa
CRI: >80
Lifespan: 30.000h
IP Rating: IP20
Insulation Class: I
Gross Weight: 12.90 Kg
Net Weight: 8.35 Kg

Montatura in alluminio satinato nero. Diffusore in silicone bianco opale. Sorgente luminosa in biemissione led dimmerabile a taglio di fase tramite dimmer esterno+push (non inclusi).

Matt black aluminium mount. White opal silicone diffuser. Dimmable bi-emission LED light source with phase cut via an external dimmer+push (not included).

Monture en aluminium noir satiné. Diffuseur en silicone blanc opale. Source lumineuse en LED bi-émission dimmable en coupure de phase via un variateur externe+poussoir (pas inclus).

Schwarzer satinierter Aluminiumrahmen. Opalweißer Silikondiffusor. LED-Lichtquelle mit Bi-Emission, dimmbar in Phase-Cut mit einem externen Dimmer+Push (nicht enthalten).

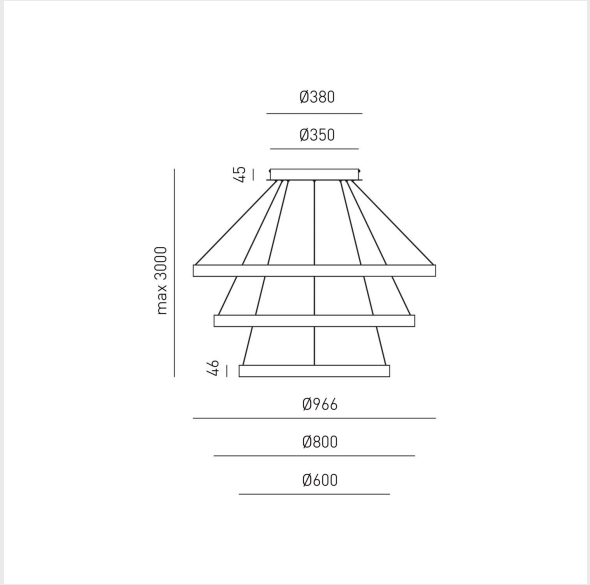

GEA LUCE



CRISEIDE S/3

FCRSO11 - ORO-SPAZZOLATO - BRUSHED GOLD

TECHNICAL DATA
Installation: Interno _ Sospensione
Source: Led integrato
Power: 125W(35W+40W+50W)
Power Supply: 220-240V AC _ 50/60Hz
Dimming: Dimmerabile _ Taglio fase+Push non incl.
Lumen: 6700lm
Color Temperature: 3000K
Light Beam: 360°_ Diffusa
CRI: >80
Lifespan: 30.000h
IP Rating: IP20
Insulation Class: I
Gross Weight: 12.90 Kg
Net Weight: 8.35 Kg

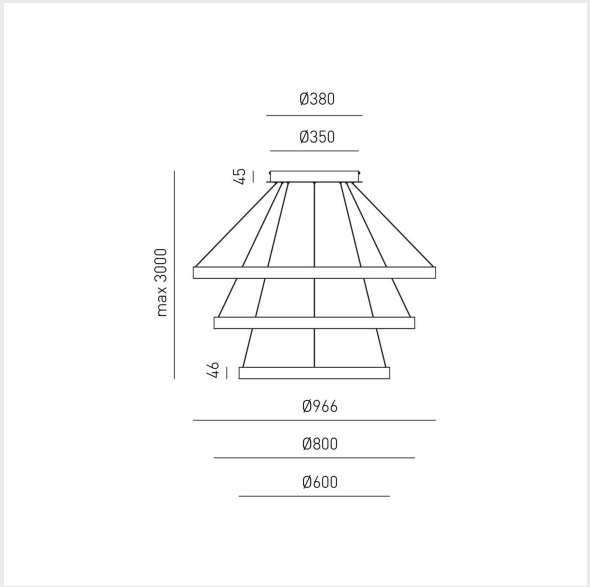

Montatura in alluminio oro spazzolato. Diffusore in silicone bianco opale. Sorgente luminosa in biemissione led dimmerabile a taglio di fase tramite dimmer esterno+push (non inclusi).

Gold -finish aluminium mount. White opal silicone diffuser. Dimmable bi-emission LED light source with phase cut via an external dimmer+push (not included).

Monture en aluminium doré brossé. Diffuseur en silicone blanc opale. Source lumineuse en LED bi-émission dimmable en coupure de phase via un variateur externe+poussoir (pas inclus).

Gebürsteter goldener Aluminiumrahmen. Opalweißer Silikondiffusor. LED-Lichtquelle mit Bi-Emission, dimmbar in Phase-Cut mit einem externen Dimmer+Push (nicht enthalten).