GEA LUCE



BLANCA S/P

FBLSB1 - BIANCO - WHITE

TECHNICAL DATA
Installation: Interno _ Sospensione
Source: 1XE27
Power: MAX 1x60W
Power Supply: 220-240V AC _ 50/60Hz
IP Rating: IP20
Insulation Class: I
Gross Weight: 2.95 Kg
Net Weight: 1.60 Kg

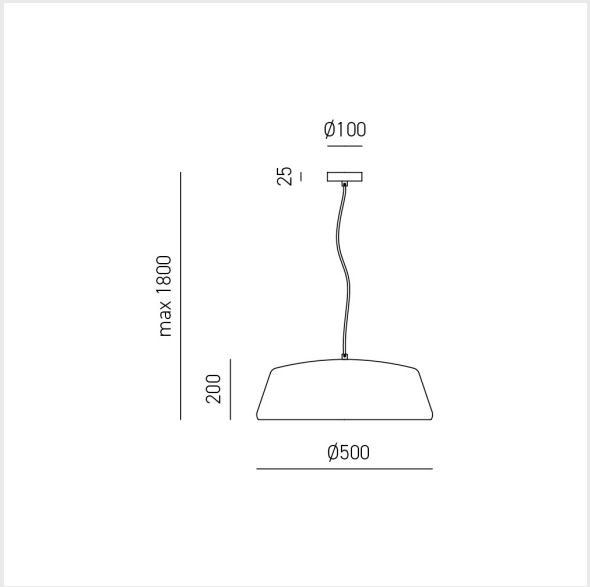

GEA LUCE



BLANCA S/P

FBLSN1 - NERO - BLACK

TECHNICAL DATA
Installation: Interno _ Sospensione
Source: 1XE27
Power: MAX 1x60W
Power Supply: 220-240V AC _ 50/60Hz
IP Rating: IP20
Insulation Class: I
Gross Weight: 2.95 Kg
Net Weight: 1.60 Kg

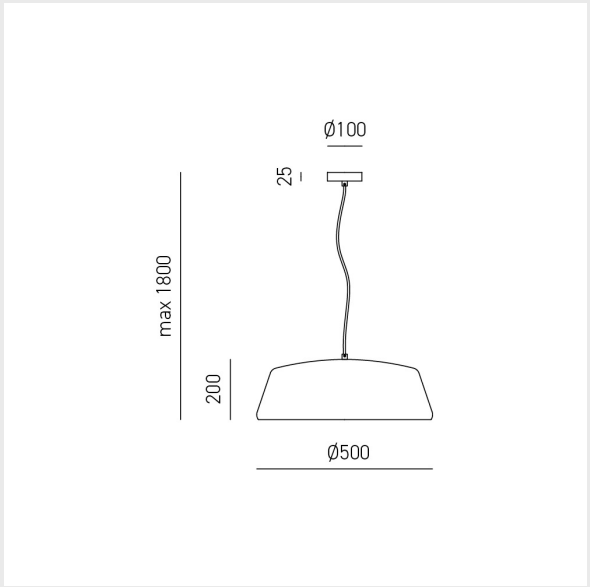

GEA LUCE



BLANCA S/P

FBLSA1 - NICKEL - NICKEL

TECHNICAL DATA
Installation: Interno _ Sospensione
Source: 1XE27
Power: MAX 1x60W
Power Supply: 220-240V AC _ 50/60Hz
IP Rating: IP20
Insulation Class: I
Gross Weight: 2.95 Kg
Net Weight: 1.60 Kg

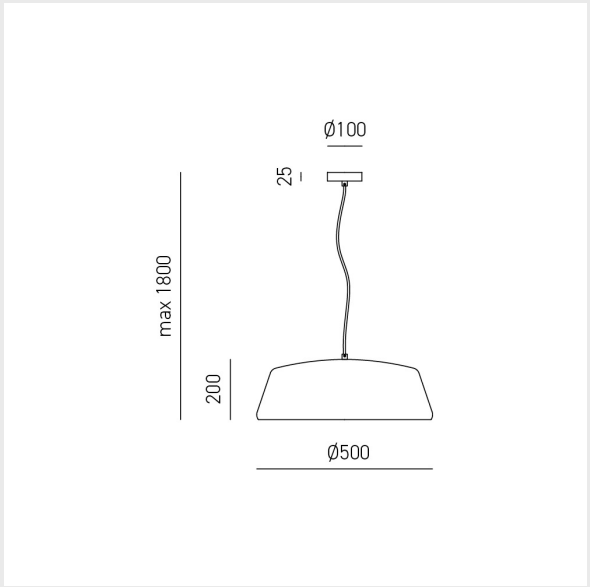

GEA LUCE



BLANCA S/P

FBLSO1 - OTTONE - BRASS

TECHNICAL DATA
Installation: Interno _ Sospensione
Source: 1XE27
Power: MAX 1x60W
Power Supply: 220-240V AC _ 50/60Hz
IP Rating: IP20
Insulation Class: I
Gross Weight: 2.95 Kg
Net Weight: 1.60 Kg

