GEA LUCE



ALICE V/G

FALVA2 - AMBRA - AMBER

TECHNICAL DATA
IP Rating: IP20
Gross Weight: 5.77 Kg
Net Weight: 4.60 Kg

Vetro grande con decorazione a sfumare trasparente. Finitura ambra.

Large glass with faded and transparent decorations. Finish: amber.

Grand verre avec décoration transparente en fondu. Finition ambre.

Großes Glas mit transparentem, verblassendem Dekor.
Bernsteinfarbenes Finish.

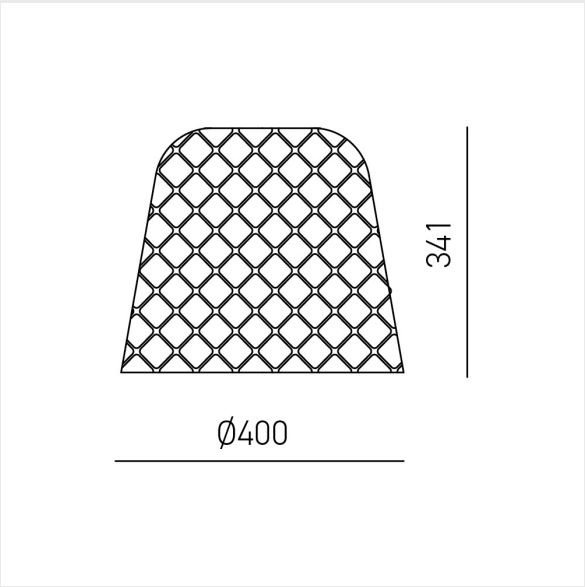

GEA LUCE



ALICE V/G

FALVB2 - BIANCO - WHITE

TECHNICAL DATA
IP Rating: IP20
Gross Weight: 5.77 Kg
Net Weight: 4.60 Kg

Vetro grande con decorazione a sfumare trasparente. Finitura bianco.

Large glass with faded and transparent decorations. Finish: white.

Grand verre avec décoration transparente en fondu. Finition blanche.

Großes Glas mit transparentem, verblassendem Dekor. Weißes Finish.

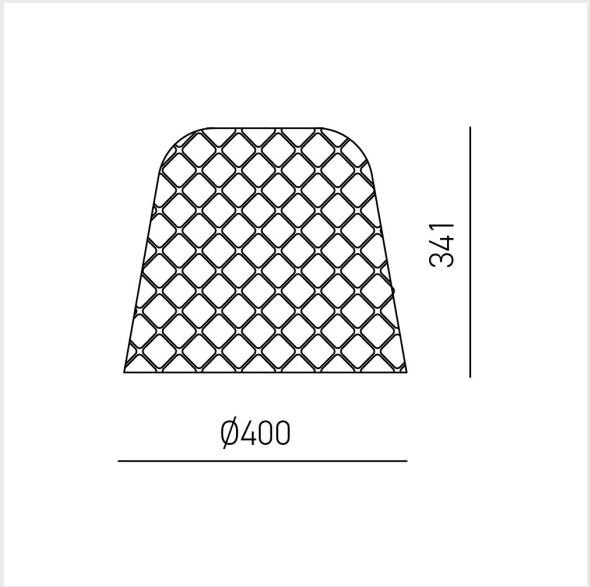

GEA LUCE



ALICE V/G

FALVF2 - FUME

TECHNICAL DATA
IP Rating: IP20
Gross Weight: 5.77 Kg
Net Weight: 4.60 Kg

Vetro grande con decorazione a sfumare trasparente. Finitura grigio fumè.

Large glass with faded and transparent decorations. Finish: smoky grey.

Grand verre avec décoration transparente en fondu. Finition gris fumé.

Großes Glas mit transparentem, verblassendem Dekor. Rauchgraue Oberfläche.

