

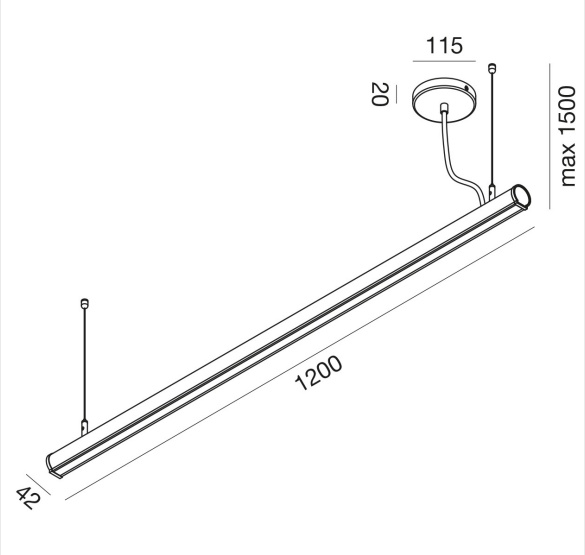

GSO120N

TECHNICAL DATA:
Power: 40W
Lumen: 4045lm
Color Temperature: 4000K
Power Supply: 220-240V AC _ 50/60Hz
IP Rating: IP40
Light Beam: 77° _ Biemissione
CRI: >80
Lifespan: 50.000h
Insulation Class: I
Installation: Interno _ Sospensione
Source: Led integrato
Dimming: Non dimmerabile _ On - Off
Energy Class: F
Volume: 0,0130m3
Gross Weight: 1.88 Kg
Net Weight: 1.44 Kg

Sospensione da ufficio in biemissione con UGR