GEA LUCE



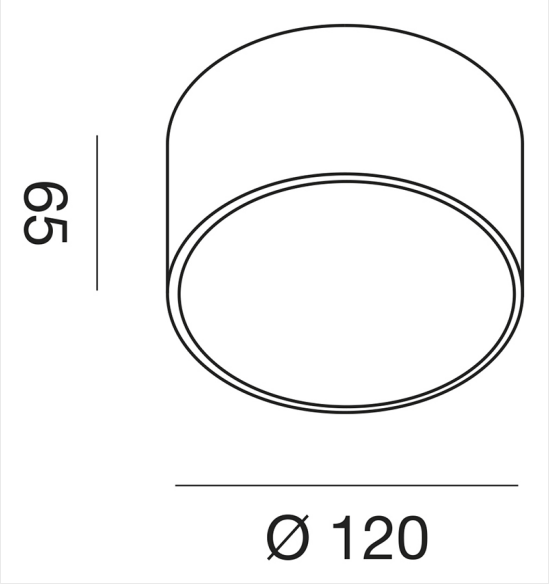

GPL242N

TECHNICAL DATA:
Power: 12W
Lumen: 1020lm
Color Temperature: 4000K
Power Supply: 220-240V AC _ 50/60Hz
IP Rating: IP20
Light Beam: 110° _ Diretta
CRI: >80
Lifespan: 30.000h
Insulation Class: I
Installation: Interno _ Soffitto
Source: Led integrato
Dimming: Non dimmerabile _ On - Off
Gross Weight: 0.62 Kg
Net Weight: 0.45 Kg

Plafoniera con struttura in alluminio. Finitura in nero opaco. Diffusore in metacrilato. Modulo LED e trasformatore incluso.

Ceiling lamp. Aluminium structure. Matt black finish. Methacrylate diffuser. LED module and transformer included.

Plafonnier avec structure en aluminium. Finition noire mate. Diffuseur en méthacrylate. Module LED et transformateur inclus.

Deckenleuchte mit Aluminiumstruktur. Mattschwarzes Finish. Diffusor aus Methacrylat. Komplett mit LED-Modul und Transformator.