GEA LUCE



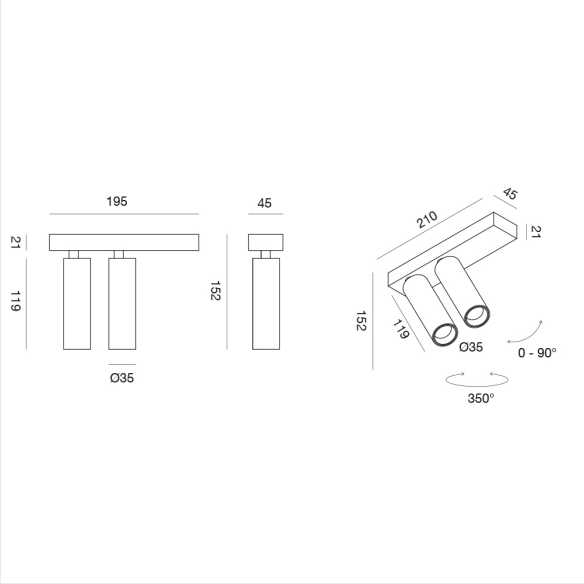

GFA1475C

TECHNICAL DATA:
Power: 14W (2X7W)
Lumen: 1024lm
Color Temperature: 3000K
Power Supply: 220-240V AC _ 50/60Hz
IP Rating: IP20
Light Beam: 38° _ Orientabile
CRI: >90
Lifespan: 30.000h
Insulation Class: I
Installation: Interno _ Soffitto
Source: Led integrato
Dimming: Non dimmerabile _ On - Off
Gross Weight: 0.57 Kg
Net Weight: 0.50 Kg

Plafone orientabile. Struttura in alluminio.Finitura in nero satinato.Modulo LED e trasformatore inclusi.

Adjustable ceiling light.Aluminium structure.Sandy black finish.LED module and transformerincluded.

Plafonnier réglable. Structure en aluminium. Finition noire satinée. Module LED et transformateur inclus.

Verstellbare Deckenleuchte. Struktur aus Aluminium. Satiniertes schwarzes Finish. Komplett mit LED-Modul und Transformator.