

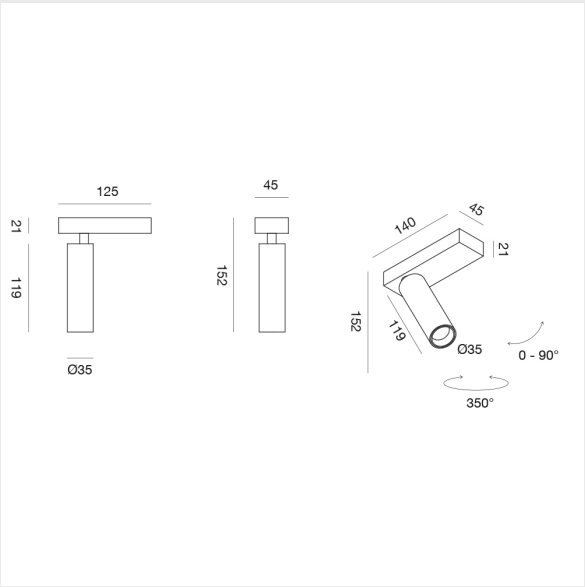

GFA1470H

TECHNICAL DATA:
Power: 7W
Lumen: 509lm
Color Temperature: 2700K
Power Supply: 220-240V AC _ 50/60Hz
IP Rating: IP20
Light Beam: 38° _ Orientabile
CRI: >90
Lifespan: 30.000h
Insulation Class: I
Installation: Interno _ Soffitto
Source: Led integrato
Dimming: Non dimmerabile _ On - Off
Gross Weight: 0.32 Kg
Net Weight: 0.29 Kg

Plafone orientabile. Struttura in alluminio.Finitura in bianco satinato.Modulo LED e trasformatore inclusi.

Adjustable ceiling light.Aluminium structure.Sandy white finish.LED module and transformerincluded.

Plafonnier réglable. Structure en aluminium. Finition blanche satinée. Module LED et transformateur inclus.

Verstellbare Deckenleuchte. Struktur aus Aluminium. Satiniertes weißes Finish. Komplett mit LED-Modul und Transformator.