GEA LUCE

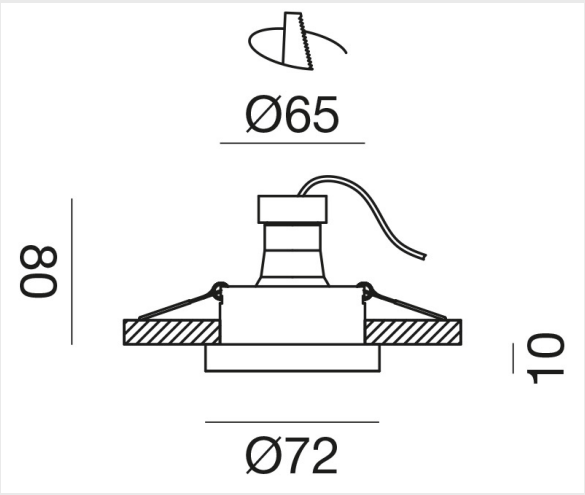

GFA1160

TECHNICAL DATA:
Power: MAX 1X50W
Power Supply: 220-240V AC _ 50/60Hz
IP Rating: IP20
Insulation Class: I
Installation: Interno _ Incasso
Source: 1XGU10
Gross Weight: 0.11 Kg
Net Weight: 0.09 Kg

Faretto ad incasso con ottica arretrata. Struttura in alluminio. Finitura in bianco opaco.

Recessed spotlight with adjustable light source. Aluminium body. Matt white finish.

Spot encastré avec optique en arrière. Structure en aluminium. Finition blanche mate.

Einbaustrahler mit versenkter Optik. Struktur aus Aluminium. Mattweißes Finish.