GEA LUCE



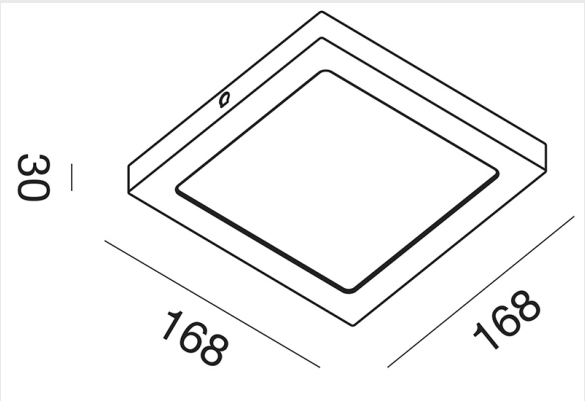


# GFA764N

**TECHNICAL DATA:**
**Power: 12W**
**Lumen: 1020lm**
**Color Temperature: 4000K**
**Power Supply: 220-240V AC _ 50/60Hz**
**IP Rating: IP20**
**Light Beam: 120° _ Diretta**
**CRI: >80**
**Lifespan: 35.000h**
**Insulation Class: II**
**Installation: Interno _ Lampada a soffitto**
**Source: Led integrato**
**Dimming: Non dimmerabile _ On - Off**

Plafoniera quadrata. Struttura in materiale termoplastico. Finitura in bianco opaco. Diffusore in plastica antiabbaglio. Modulo LED incluso.

Square ceiling light. Structure in thermoplastic material. Matt white finish. Anti-glare plastic diffuser. LED module included.

Plafonnier carré. Structure en matériel thermoplastique. Finition blanche mate. Diffuseur en plastique anti-éblouissement. Module LED inclus.

Quadratische Deckenleuchte. Struktur aus thermoplastischem Material. Mattweißes Finish. Blendfreier Kunststoffdiffusor. Komplett mit LED-Modul.