GEA LUCE



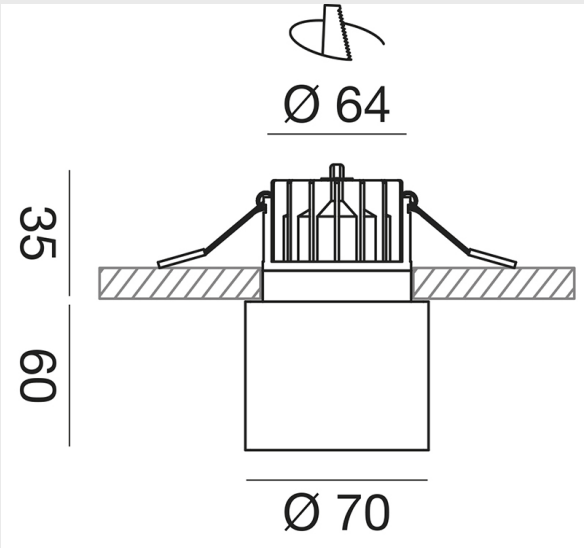

GFA362

TECHNICAL DATA:
Power: 9W
Lumen: 400lm
Color Temperature: 3000K
Power Supply: 220-240V AC _ 50/60Hz
IP Rating: IP54
Light Beam: 25° _ Diretta
CRI: >90
Lifespan: 50.000h
Insulation Class: III
Installation: Interno _ Incasso
Source: Led integrato
Dimming: Non dimmerabile _ On - Off
Gross Weight: 0.42 Kg
Net Weight: 0.34 Kg

Faretto ad incasso. Struttura in alluminio. Finitura in nero satinato. Diffusore trasparente. Modulo LED e trasformatore inclusi. 5 anni di garanzia.

Recessed spotlight. Aluminium structure. Sand black finish. Clear diffuser. LED module and trasformer included. 5 years warranty.

Projecteur encastré. Structure en aluminium. Finition noire satinée. Diffuseur transparent. Module LED et transformateur inclus. Garantie de 5 ans.

Einbaustrahler. Struktur aus Aluminium. Satiniertes schwarzes Finish. Transparenter Diffusor. Komplett mit LED-Modul und Transformator. 5 Jahre Garantie.