GEA LUCE



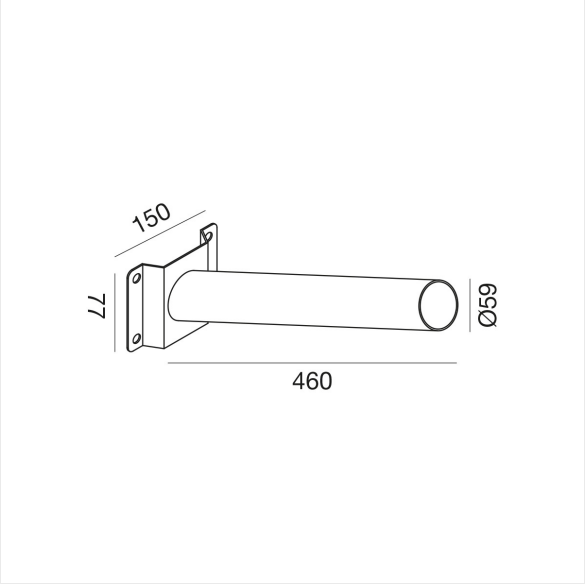

GESC10

TECHNICAL DATA:
Power: 4W
Lumen: 320lm
Color Temperature: 3000K
Power Supply: 220-240V AC _ 50/60Hz
IP Rating: IP20
Light Beam: 30°
CRI: >80
Lifespan: 50.000h
Insulation Class: II
Gross Weight: 1.45 Kg
Net Weight: 1.27 Kg

STAFFA PER GES2350-GES2351-GES2352

BRACKET FOR GES2350-GES2351-GES2352

SUPPORT POUR GES2350-GES2351-GES2352

HALTERUNG FÜR GES2350-GES2351-GES2352