GEA LUCE



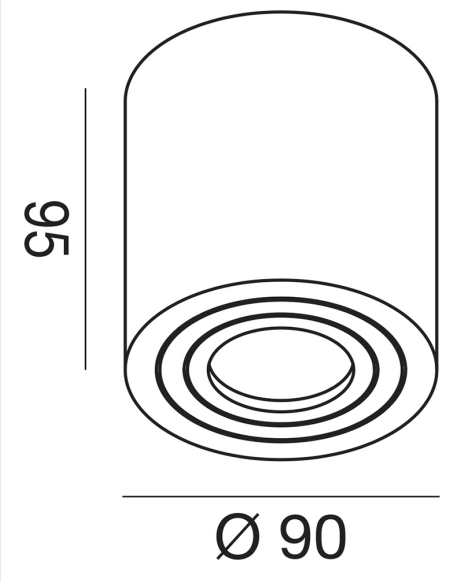

GES1075

TECHNICAL DATA:
Power: MAX 1X35W
Power Supply: 220-240V AC _ 50/60Hz
IP Rating: IP65
Insulation Class: I
Installation: Esterno _ Soffitto
Source: 1XGU10
Gross Weight: 0.39 Kg
Net Weight: 0.34 Kg

Plafone. Struttura in alluminio pressofuso. Finitura in marrone. Diffusore in vetro temperato satinato.

Ceiling light. Die-cast aluminium structure. Brown finish. Frost tempered glass diffuser.

Plafonnier. Structure en aluminium moulé sous pression. Finition en marron. Diffuseur en verre trempé satiné.

Deckenleuchte. Struktur aus druckgegossenem Aluminium. Braunes Finish. Diffusor aus satiniertem, gehärtetem Glas.