GEA LUCE



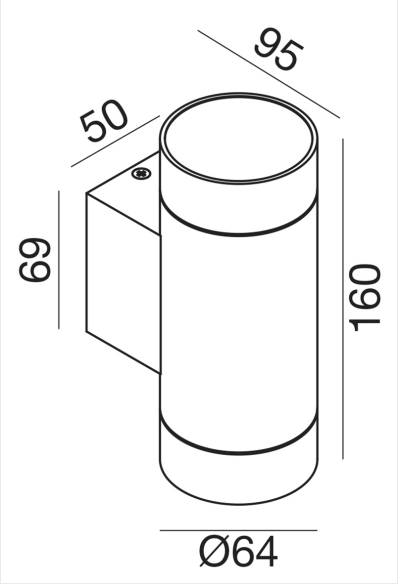

GES1064

TECHNICAL DATA:
Power: MAX 1X35W
Power Supply: 220-240V AC _ 50/60Hz
IP Rating: IP54
Insulation Class: I
Installation: Esterno _ Parete
Source: 1XGU10
Gross Weight: 0.52 Kg
Net Weight: 0.47 Kg

Applique. Struttura in alluminio. Finitura in bianco. Diffusore in vetro temperato.

Wall light. Aluminium structure. White finish. Tempered glass diffuser.

Applique lumineuse. Structure en aluminium. Finition blanche. Diffuseur en verre trempé.

Wandleuchte. Aluminium-Struktur. Weißes Finish. Diffusor aus gehärtetem Glas.