GEA LUCE

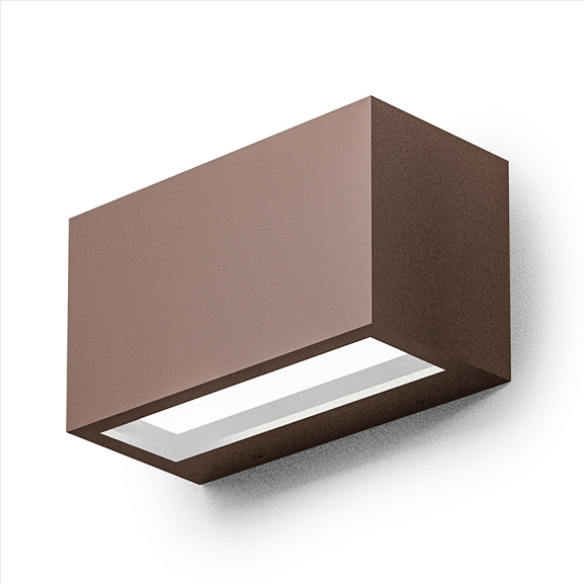

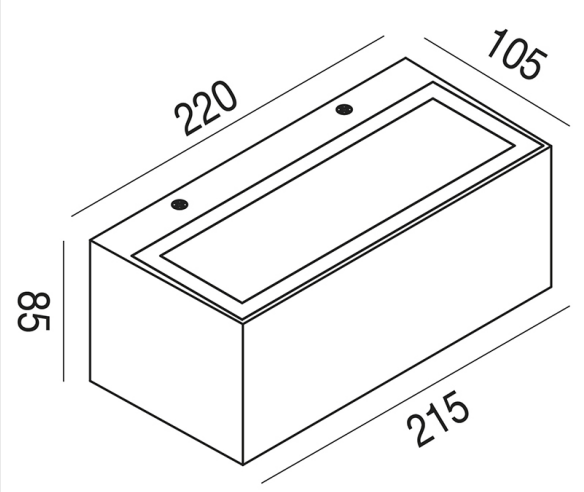

GES972

TECHNICAL DATA:
Power: 15W
Lumen: 602lm
Color Temperature: 4000K
Power Supply: 220-240V AC _ 50/60Hz
IP Rating: IP65
Light Beam: 120° _ Biemissione
CRI: >80
Lifespan: 25.000h
Insulation Class: I
Installation: Esterno _ Parete
Source: Led integrato
Dimming: Non dimmerabile _ On - Off
Gross Weight: 0.99 Kg
Net Weight: 1.03 Kg

Applique. Struttura in alluminio pressofuso. Finitura in ruggine. Diffusore in vetro trasparente. Modulo LED incluso.

Wall light. Die-cast aluminum structure. Rusty finish. Clear glass diffuser.LED module included.

Applique murale. Structure en aluminium moulé sous pression. Finition rouille. Diffuseur en verre transparent. Module LED inclus.

Wandleuchte. Struktur aus druckgegossenem Aluminium. Rostfarbenes Finish. Transparenter Glasdiffusor. Komplett mit LED-Modul.