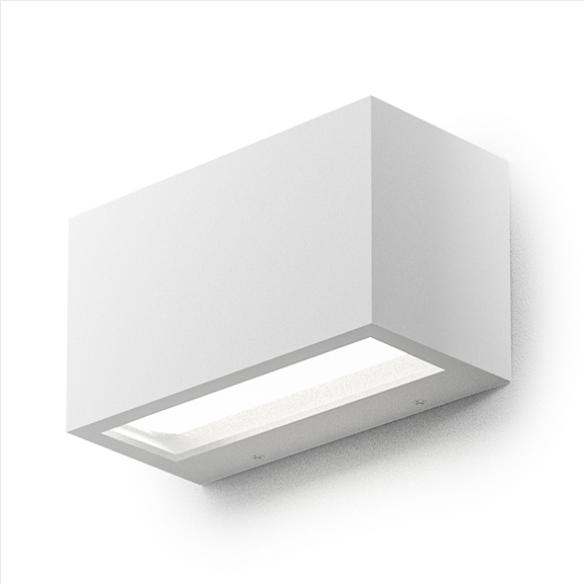

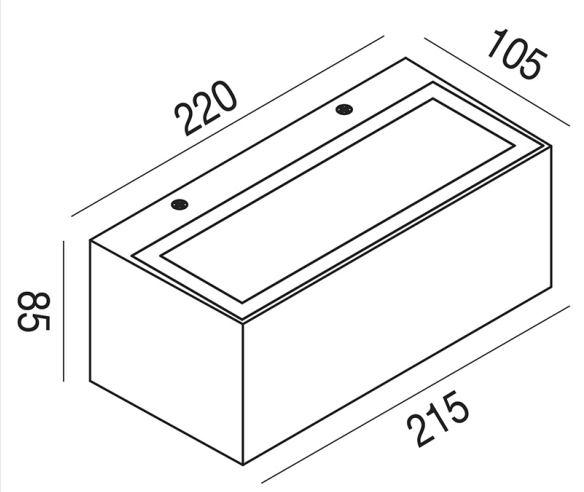

GES971

TECHNICAL DATA:
Power: 15W
Lumen: 755lm
Color Temperature: 4000K
Power Supply: 220-240V AC _ 50/60Hz
IP Rating: IP65
Light Beam: 120° _ Biemissione
CRI: >80
Lifespan: 25.000h
Insulation Class: I
Installation: Esterno _ Parete
Source: Led integrato
Dimming: Non dimmerabile _ On - Off
Gross Weight: 0.99 Kg
Net Weight: 1.03 Kg

Applique. Struttura in alluminio pressofuso. Finitura in bianco. Diffusore in vetro trasparente. Modulo LED incluso.

Wall light. Die-cast aluminum structure. White finish. Clear glass diffuser.LED module included.

Applique murale. Structure en aluminium moulé sous pression. Finition blanche. Diffuseur en verre transparent. Module LED inclus.

Wandleuchte. Struktur aus druckgegossenem Aluminium. Weißes Finish. Diffusor aus transparentem Glas. Komplett mit LED-Modul.