GEA LUCE



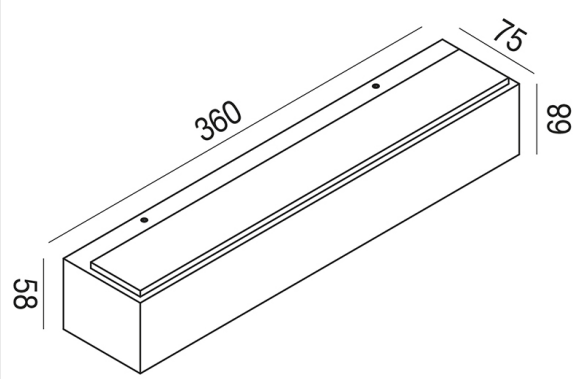

GES963C

TECHNICAL DATA:
Power: 20W
Lumen: 919lm
Color Temperature: 3000K
Power Supply: 220-240V AC _ 50/60Hz
IP Rating: IP65
Light Beam: 120° _ Biemissione
CRI: >80
Lifespan: 25.000h
Insulation Class: I
Installation: Esterno _ Parete
Source: Led integrato
Dimming: Non dimmerabile _ On - Off
Gross Weight: 1.26 Kg
Net Weight: 1.16 Kg

Applique. Struttura in alluminio pressofuso. Finitura in grigio antracite. Diffusore in policarbonato. Modulo LED incluso.

Wall light. Die-cast aluminum structure. Grey graphite finish. PC diffuser. LED module included.

Applique murale. Structure en aluminium moulé sous pression. Finition en gris anthracite. Diffuseur en polycarbonate. Module LED inclus.

Wandleuchte. Struktur aus druckgegossenem Aluminium. Anthrazitgraues Finish. Diffusor aus Polycarbonat. Komplett mit LED-Modul.