

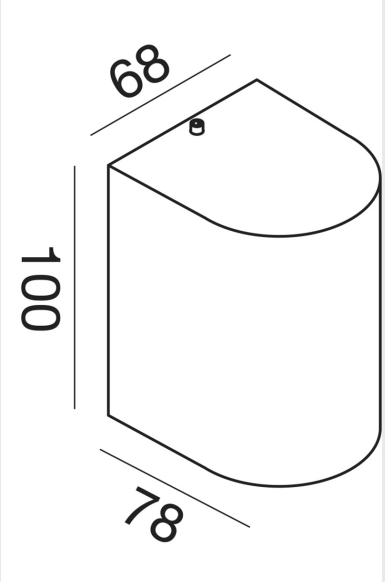

GES901

TECHNICAL DATA:
Power: MAX 1X35W
Power Supply: 220-240V AC _ 50/60Hz
IP Rating: IP44
Insulation Class: I
Installation: Esterno _ Parete
Source: 1XGU10
Gross Weight: 0.39 Kg
Net Weight: 0.33 Kg

Applique. Struttura in alluminio pressofuso. Diffusore in vetro. Finitura in grigio antracite.

Wall lights. Die-cast aluminium structure. Glass diffuser. Grey graphite finish.

Applique murale. Structure en aluminium moulé sous pression. Diffuseur en verre. Finition en gris anthracite.

Wandleuchte. Struktur aus druckgegossenem Aluminium. Diffusor aus Glas. Anthrazitgraues Finish.