GEA LUCE



GES867C

TECHNICAL DATA:
Power: 2X10W
Lumen: 830lm
Color Temperature: 3000K
Power Supply: 220-240V AC _ 50/60Hz
IP Rating: IP65
Light Beam: 0-115° _ Biemissione
CRI: >80
Lifespan: 30.000h
Insulation Class: I
Installation: Esterno _ Parete
Source: Led integrato
Dimming: Non dimmerabile _ On - Off
Gross Weight: 1.07 Kg
Net Weight: 1.00 Kg

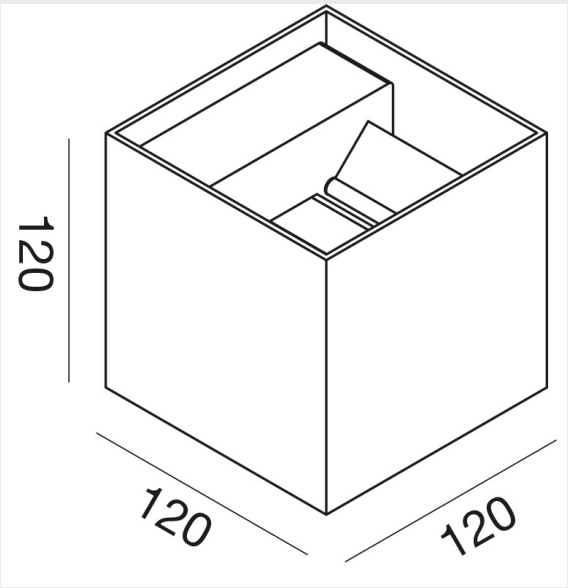

Struttura in alluminio pressofuso. Diffusore in vetro trasparente. Alette interne regolabili per creare diversi effetti di luce. Modulo LED e trasformatore inclusi.Finitura in marrone.

Die-cast aluminium structure. Transparent glass diffuser. Internal adjustable wings to create different lighting effects. LED module and transformer included.Grey graphite finish.

Structure en aluminium moulé sous pression. Diffuseur en verre transparent. Ailettes internes réglables pour créer différents effets de lumière. Module LED et transformateur inclus. Finition en marron.

Struktur aus druckgegossenem Aluminium. Diffusor aus transparentem Glas. Verstellbare Innenlamellen für unterschiedliche Lichteffekte.Braunes Finish. Komplett mit LED und Transformator.