GEA LUCE



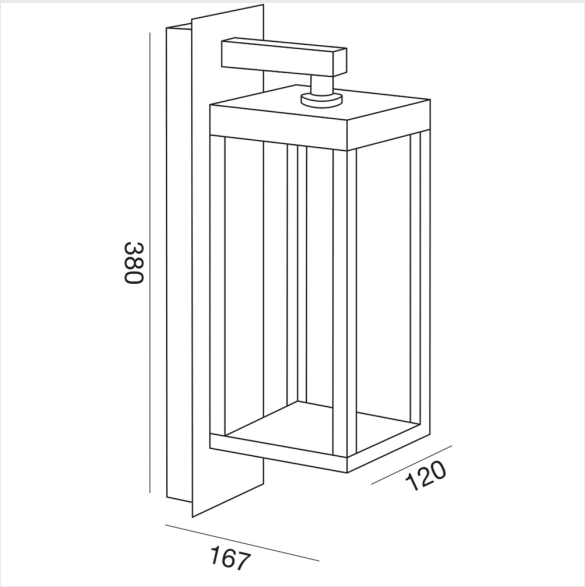


# GES772C

**TECHNICAL DATA:**
**Power: 13W**
**Lumen: 500lm**
**Color Temperature: 3000K**
**Power Supply: 220-240V AC _ 50/60Hz**
**IP Rating: IP54**
**Light Beam: 120° _ Diretta**
**CRI: >80**
**Lifespan: 25.000h**
**Insulation Class: I**
**Installation: Esterno _ Parete**
**Source: Led integrato**
**Dimming: Non dimmerabile _ On - Off**
**Gross Weight: 2.59 Kg**
**Net Weight: 2.12 Kg**

Applique. Struttura in alluminio. Finitura in marrone. Diffusore in vetro trasparente. Modulo LED e trasformatore inclusi.

Wall light. Aluminium structure. Brown finish. Transparent glass diffuser. LED module and transformer included.

Applique lumineuse. Structure en aluminium. Finition brun. Diffuseur en verre transparent. Module LED et transformateur inclus.

Wandleuchte. Rahmen aus Aluminium. Braun Finish. Transparenter Glasdiffusor. Komplett mit LED-Modul und Transformator.